⚠ *For better safety, this bit should be used only in a router table and **not free hand**.*

This bit can be used to create the rails, stiles, muntins, grilles and glazing bars for small divided doors and windows.

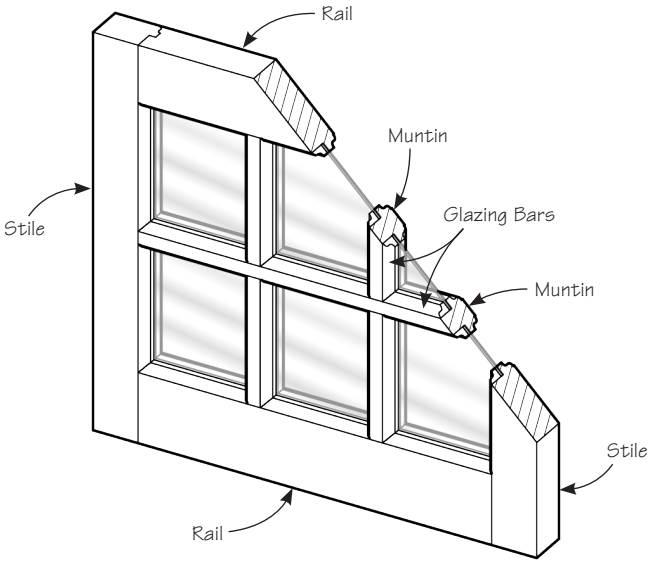

Figure 1: Door and window components.

This bit is suited for use on material from 1 1/8″ to 1 1/2″. The stock thickness will depend on the glass thickness and glazing method used. Please refer to **Table 1** (at the end of these instructions) for suitable options.

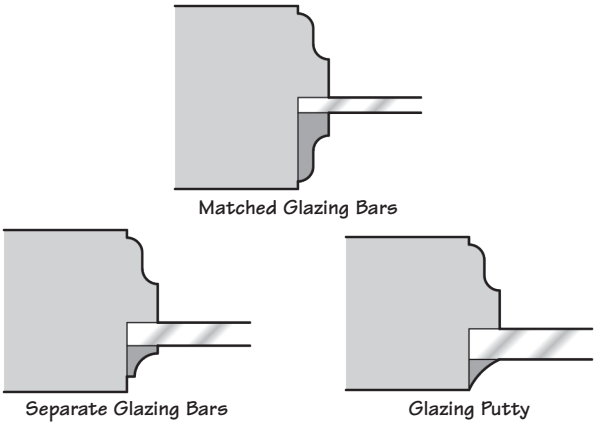

Figure 2: Glazing methods.

This bit can be configured for both the sticking cut and the coping cut to form a joint as shown in **Figure 3**. Note that this butt joint does not have great strength and cannot be used for large or full-size French doors. For larger-scale projects, the frame must be assembled with proper mortises and tenons (see **Figure 4**).

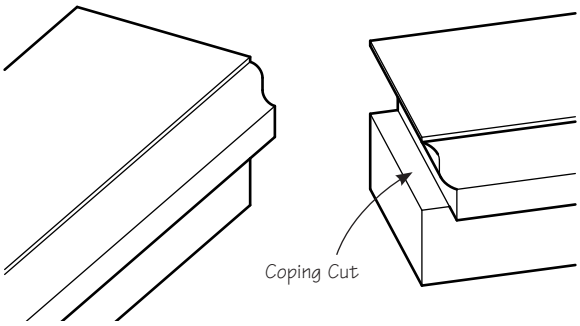

Figure 3: Coped joint formed with this bit.

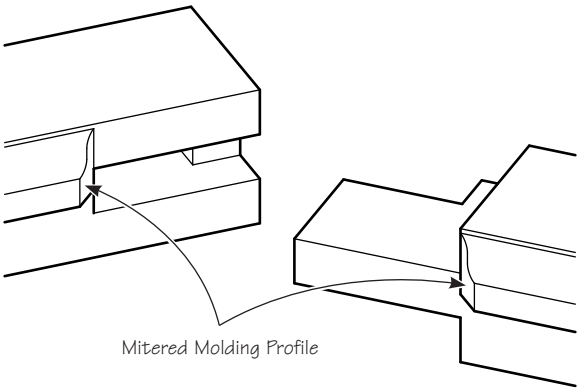

Figure 4: Mortise and tenon joint.

Creating a Sizing Block

A sizing block is a short length of wood with a cut along one edge made by the profiling cutter of the bit. (See **Figure 5**.) It is required for setting the cutter spacing when the bit is assembled for the sticking cut. The block should be made from a dense hardwood (maple, birch, etc.) and should be about 7/8″ thick. As the sizing block will be required each time the bit is used, it should be labelled and kept with the bit.

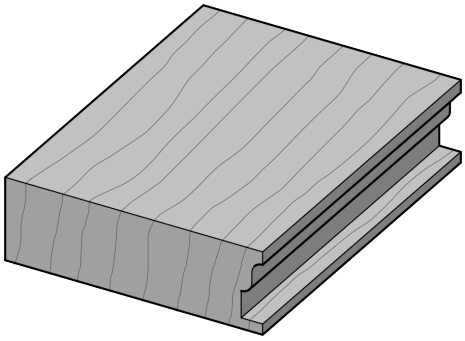

Figure 5: Sizing block.

To make the sizing block, install the bit in a table-mounted router. The height of the bit should be set to leave material above and below the profiling cutter (see **Figure 6**). It doesn't matter which way the bit is assembled for this cut. The bearing should be set flush with the face of your fence. Run the block through.

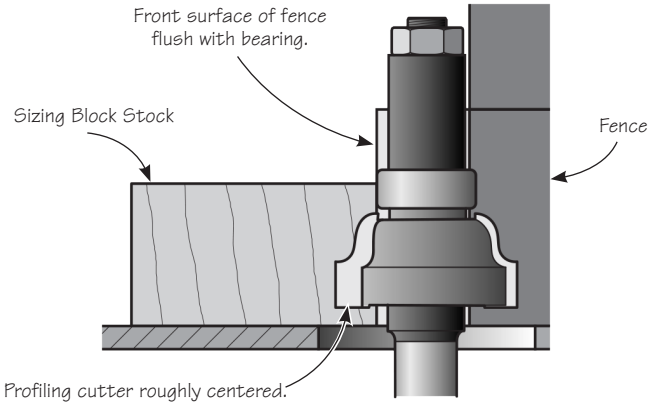

Figure 6: Set-up for sizing block.

Cutting Rails and Stiles

1. Prepare the frame rails and stiles, as well as extra pieces to be used for router set-up. All pieces must be flat and of consistent thickness. For small frames assembled with a coped joint, the length of the rails is equal to the visible width of the rails (dimension R shown in **Figure 7**). For large frames assembled with tenons, the length of the rails is equal to the outside width of the frame (dimension W). The length of the stiles is equal to the outside height of the frame, regardless of the type of joint (dimension H).

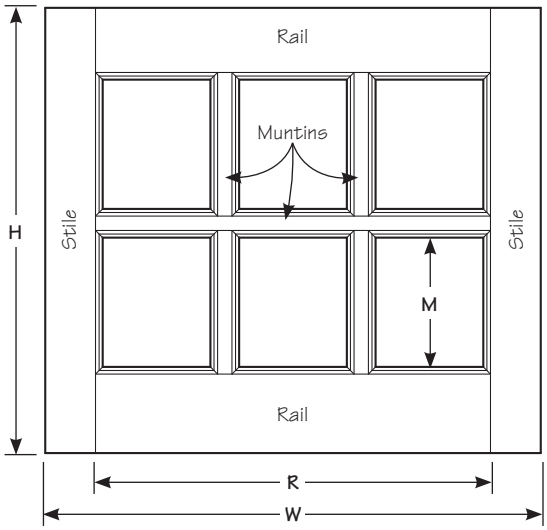

Figure 7: Piece part lengths.

2. Assemble the router bit in the "sticking cut" configuration (see **Figure 8**). Install the bit in a table-mounted router and run a length of scrap through to test the cutter spacing (dimension D shown in **Figure 8**).

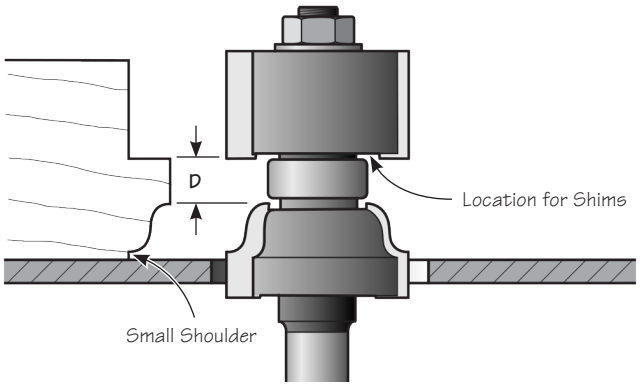

Figure 8: Set-up for sticking cut.

3. Use the sizing block to check the spacing of the cutters. (See **Figure 9**.) If the test piece is too tight or does not fit into the sizing block, shims between the cutters need to be removed. If the fit is too loose, more shims must be added. Shims can be added above or below the bearing. Repeat the test cut until a satisfactory fit is achieved. Make a note (on the sizing block) of the number (or thickness) of shims used for future reference.

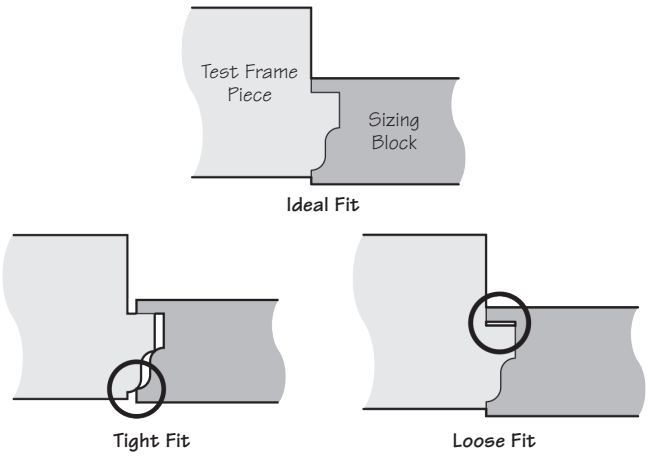

Figure 9: Testing the cutter spacing.

4. Adjust the height so that a small shoulder will be cut on the inner face of the frame pieces (see **Figure 8**). Set the router table fence flush with the pilot bearing. Rout the inner edge of all frame pieces.

5. For full-size doors assembled with tenons, cut the mortises and tenons as shown in **Figures 4** and **10**. Note that the profiled corners are mitered, rather than coped. For tenonless assemblies, the coping cuts should be made **after** the muntins are profiled.

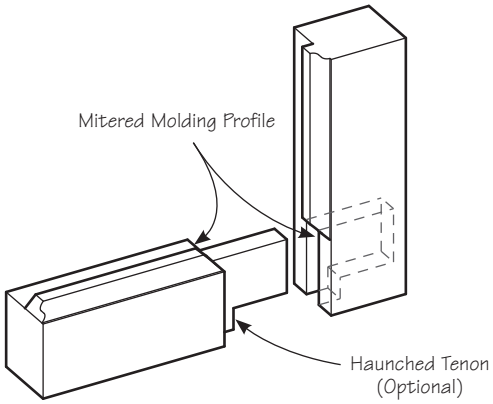

Figure 10: Mortise and tenon detail.

Cutting the Muntins

As with the rails and stiles, the stock for the muntins must be flat and of consistent thickness.

The muntins are first cut with the router bit in the same set-up as the rails and stiles. Both edges of the muntins are profiled. Running narrow stock through a router can be unsafe. A muntin jig (see **Figure 11**) can be used. This jig consists of a plate with an adjustable block to support the muntin and a hook to push the muntin forward.

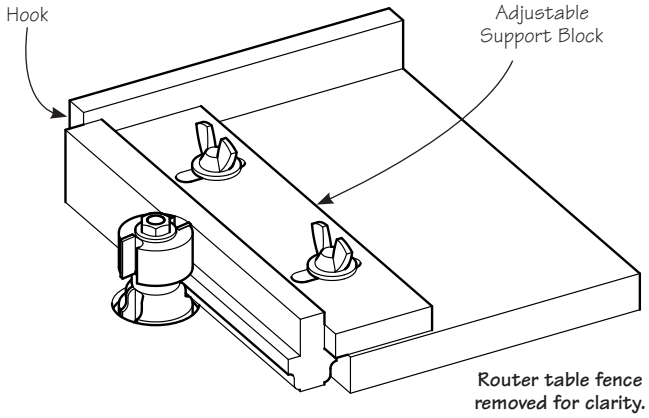

Figure 11: Muntin jig.

Cut the muntins to length. The cut length of each muntin matches the visible length in the final assembly (dimensions M and R shown in **Figure 7**).

Coping the Muntins, Rails and Stiles

Assemble the bit for the "coping cut". The configuration of the router bit will depend on the thickness of the stock used, as shown in **Figure 12**. Adjust the bit height using a routed frame piece as a guide. Make test cuts to perfect the height.

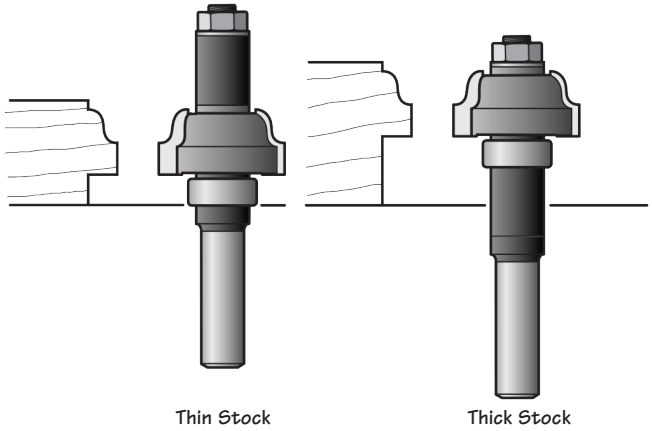

Figure 12: Set-up for coping cut.

Use a right-angle fixture to guide the ends of the muntins, rails and stiles through the router (see **Figure 13**). Use a scrap piece of stock with a coping cut along its length to support the rails and muntins to prevent tear-out.

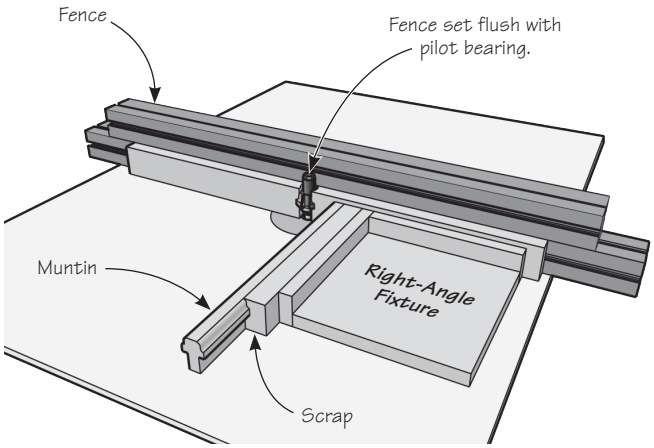

Figure 13: Using the right-angle fixture.

Making the Glazing Bars

Glazing bars are used to hold the glass in place on a divided window or door. This bit can be used to cut glazing bars that match the rest of the molding, but only for certain combinations of frame and glass thicknesses. Refer to **Table 1** at the end of these instructions to determine the maximum stock thickness for the glazing bars.

Assemble the bit for the "glazing cut" as shown in **Figure 14**. Adjust the height of the bit so that the sharp corner of the cutting profile is aligned with the router table. Set the router table fence flush with the pilot bearing.

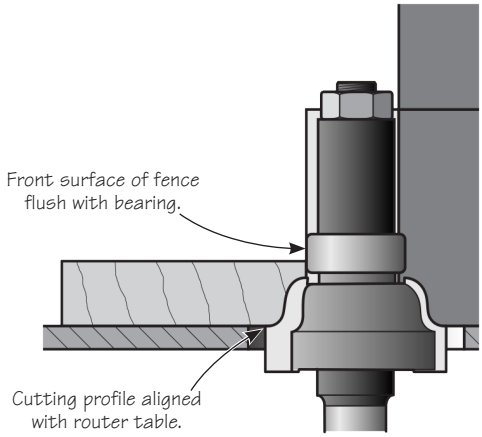

Figure 14: Set-up for glazing cut.

Since cutting the glazing bars from small stock (e.g., 1/4″ × 11/16″) is unsafe, a better approach is to profile the edge of a wider piece of stock, then rip 1/4″ thick glazing bars on the table saw (see **Figure 15**).

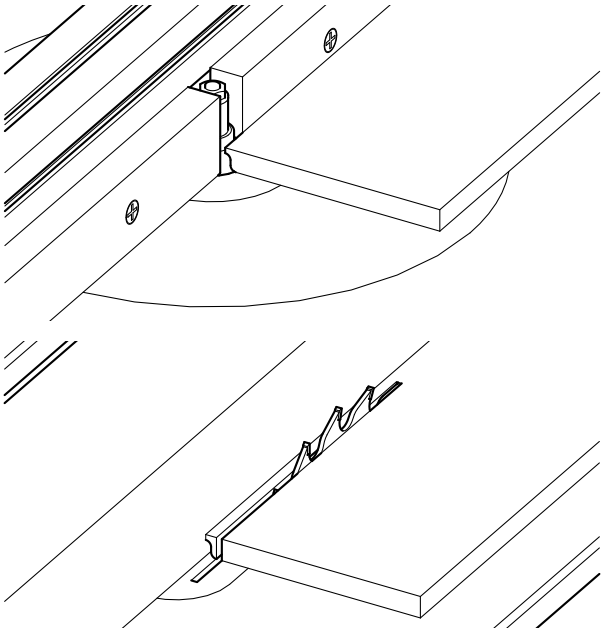

Figure 15: Cutting Glazing Bars.

The glazing bars can be coped or mitered when the door or window is assembled. Coping the ends of the glazing bars can be done using a variation of the right-angle jig shown in **Figure 13**.

Coping vs. Mitering

When assembling a project, it is rarely considered how the project would be taken apart. For a divided window, the possibility of a broken pane is very real. Repairing a divided window requires the removal of the glazing bars, a step that is easier if the bars have been coped rather than mitered and fastened with brads rather than glue.

Table 1: Thickness Options

Glass Thickness	Rail, Stile and Muntin Thickness						
	1 1/2″	1 7/16″	1 3/8″	1 5/16″	1 1/4″	1 3/16″	1 1/8″
3 mm	5/8″	9/16″	1/2″	7/16″	3/8″	5/16″	1/4″
1/8″	5/8″	9/16″	1/2″	7/16″	3/8″	5/16″	1/4″
4 mm	9/16″	1/2″	7/16″	3/8″	5/16″	1/4″	
3/16″	9/16″	1/2″	7/16″	3/8″	5/16″	1/4″	
5 mm	9/16″	1/2″	7/16″	3/8″	5/16″	1/4″	
6 mm	1/2″	7/16″	3/8″	5/16″	1/4″		
1/4″	1/2″	7/16″	3/8″	5/16″	1/4″		
	Maximum Glazing Bar Thickness						

Note: *Cells with a gray background denote glazing bar thicknesses that cannot be cut with this bit. Purchased molding, panel retainers or glazing putty will need to be used instead. Empty cells indicate that the combination of material thickness and glass thickness does not leave enough material for glazing. Thicker material or thinner glass should be used.*

Distributed by / Distribué par
Lee Valley Tools Ltd. Ottawa ON K2H 1C2 Canada leevalley.com